WHOA!!! CAUTION

NOT SO FAST

This product is made out of MDF / Supawood and is fragile of nature.

We recommend all pieces to be test fitted and if required contact pieces to be filed / sanded down for a better fit.

PLEASE DO NOT FORCE FIT ANY PIECES AS IT WILL BREAK!

ENJOY BUILDING YOUR NEW MODEL.

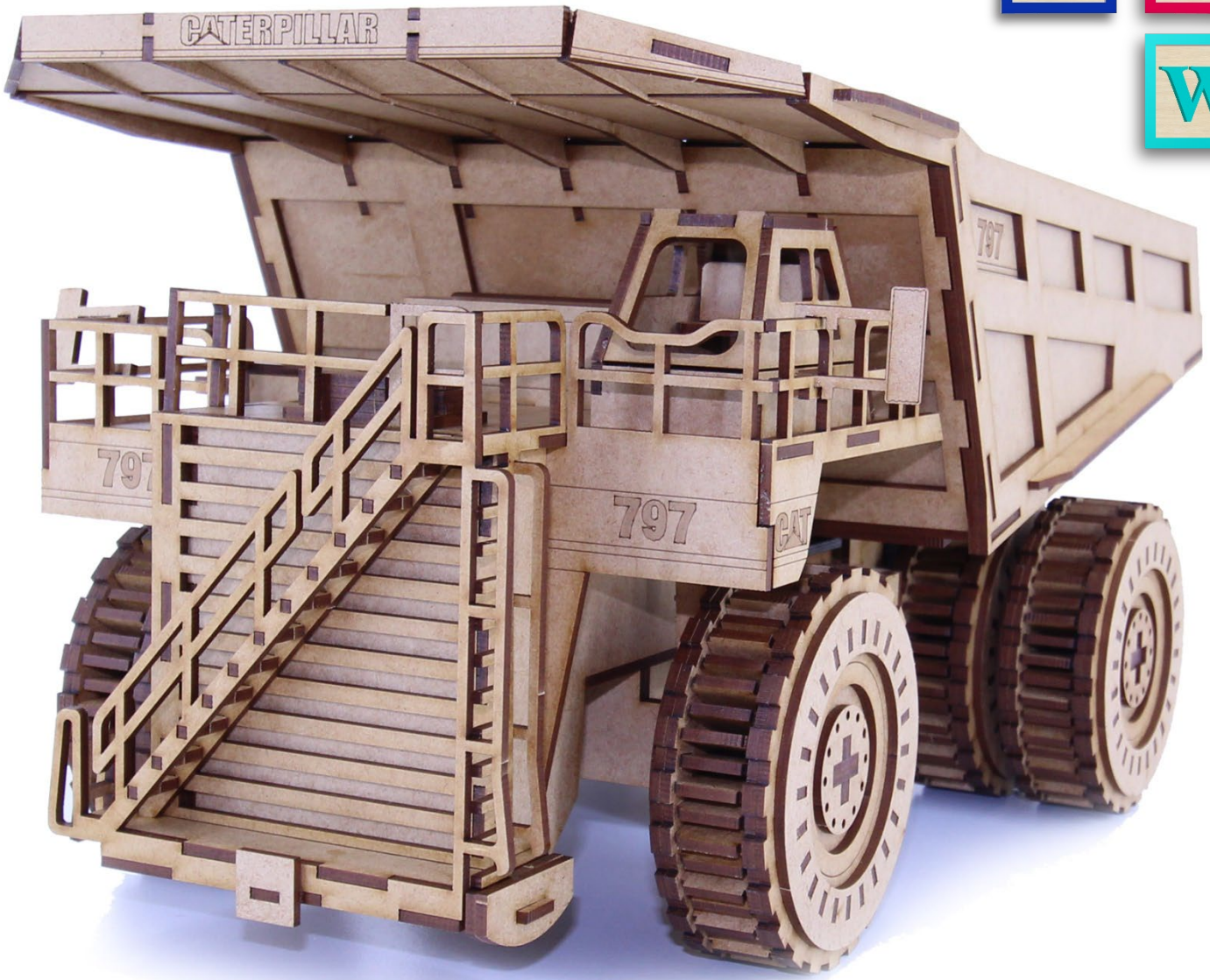

Caterpillar 797 Haul Truck

WWW.WOWWE.CO.ZA

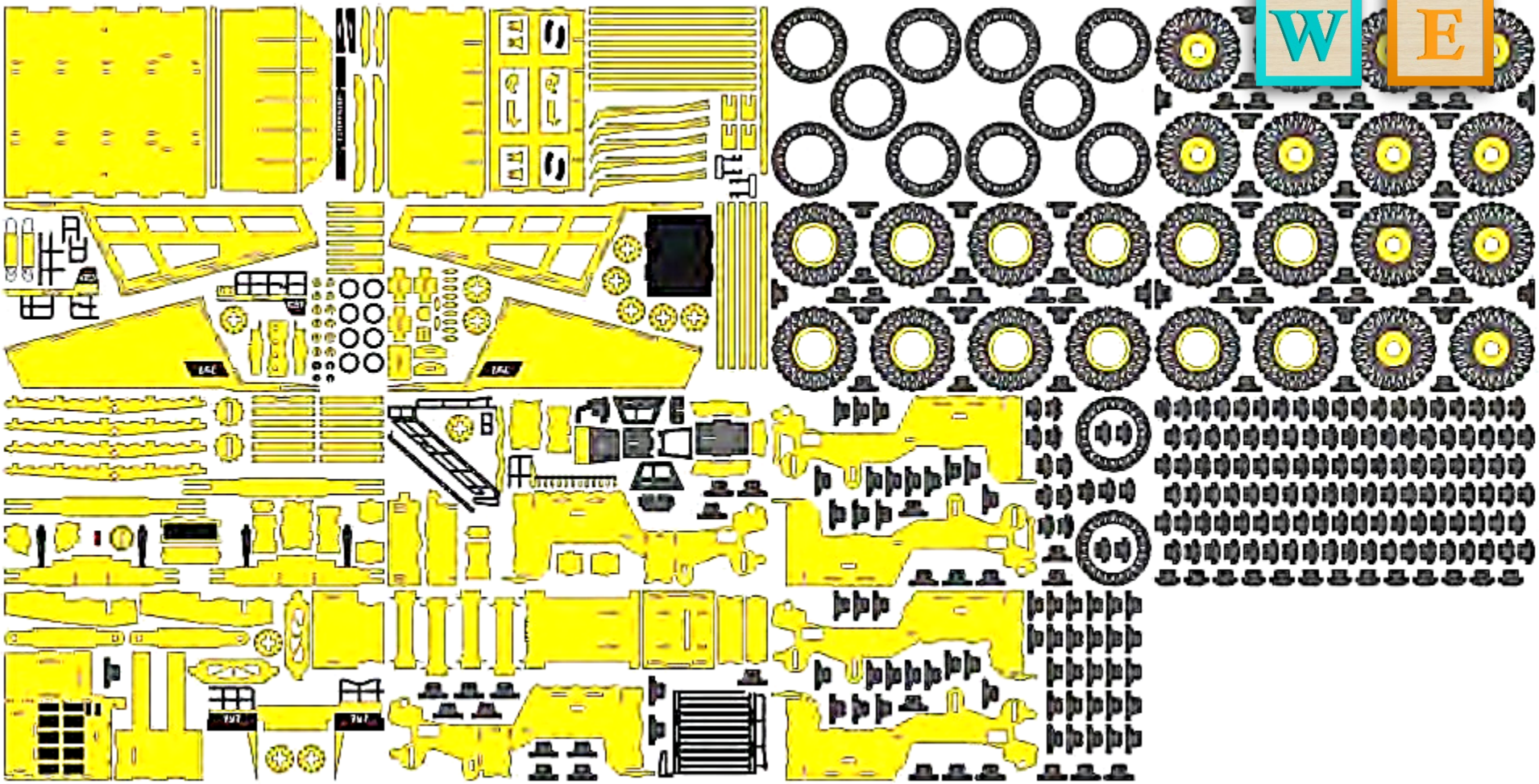

PARTS LIST

IT IS RECOMMENDED TO GO THROUGH ALL THE PAGES AND SEE EACH STEP BEFORE STARTING THE ASSEMBLY

Full quality picture on the website as well.

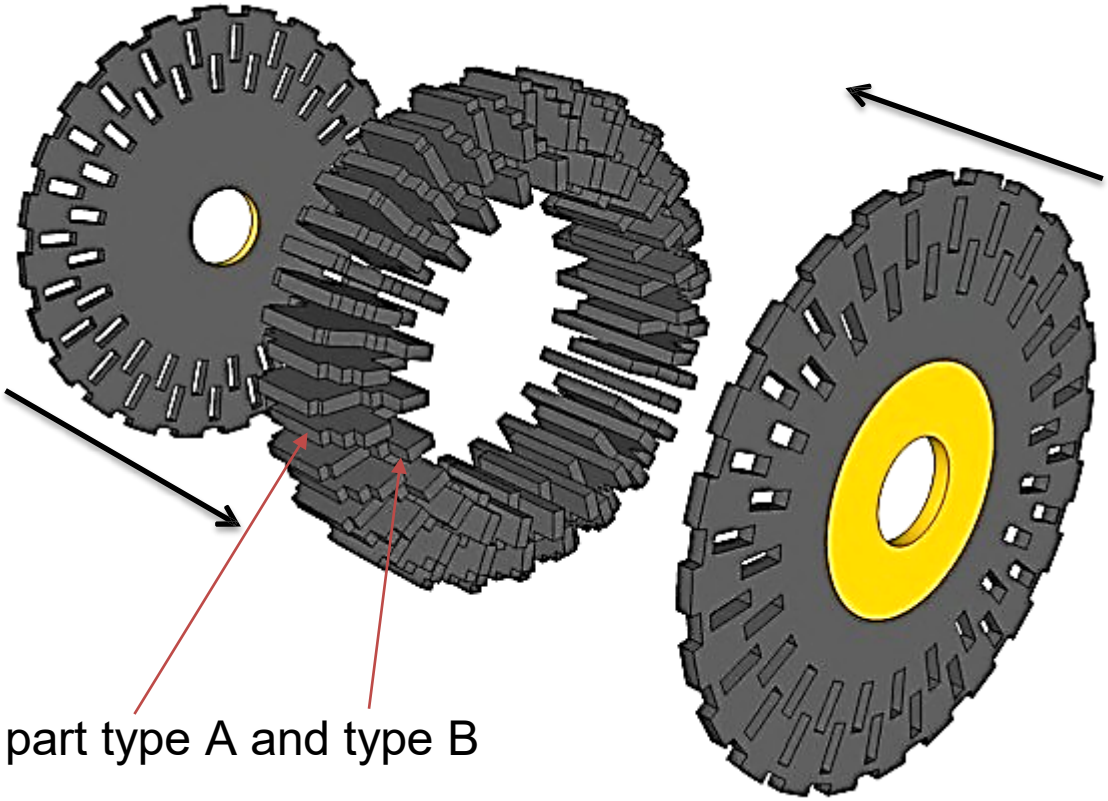

Take note of part type A and type B

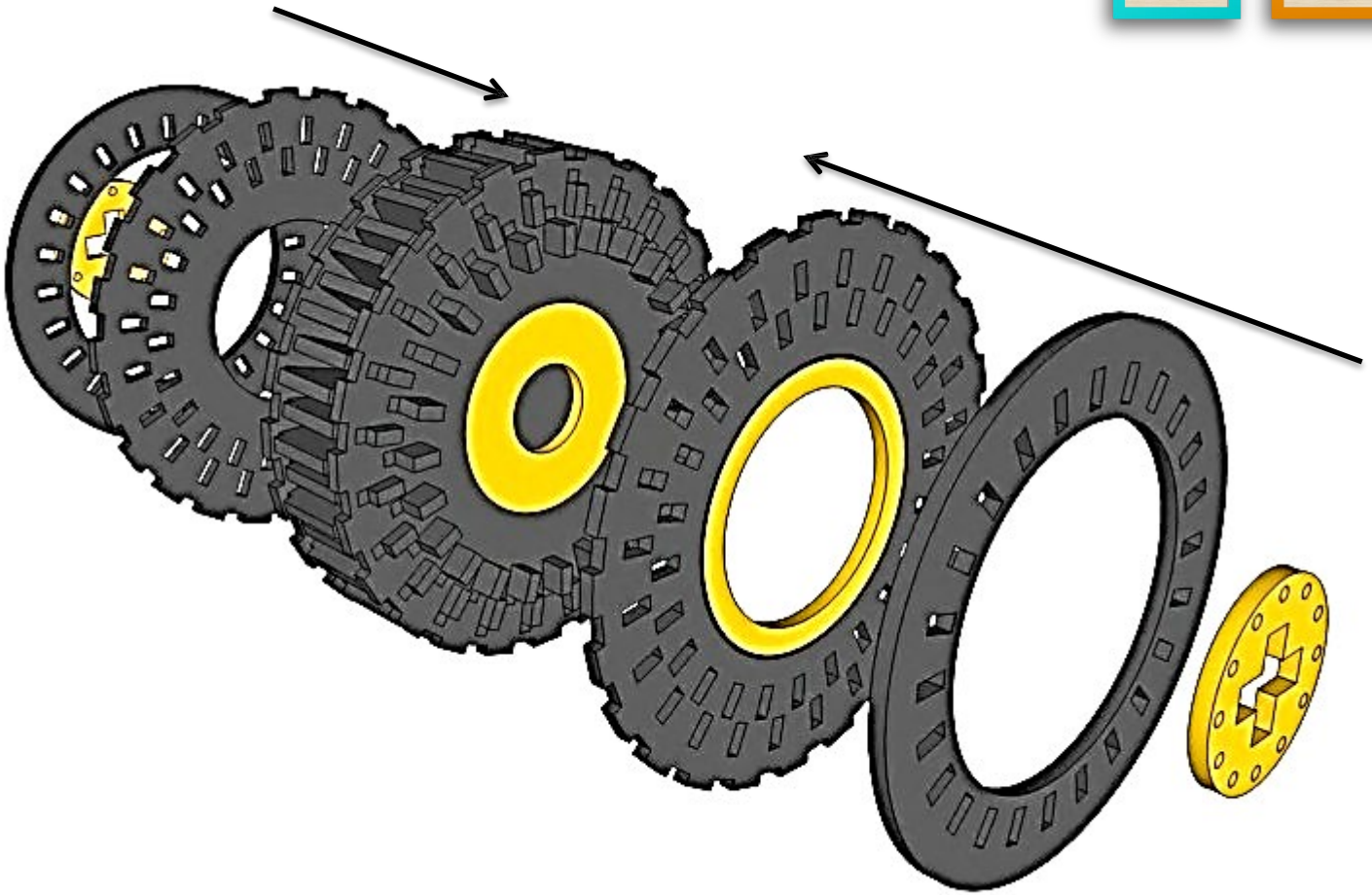

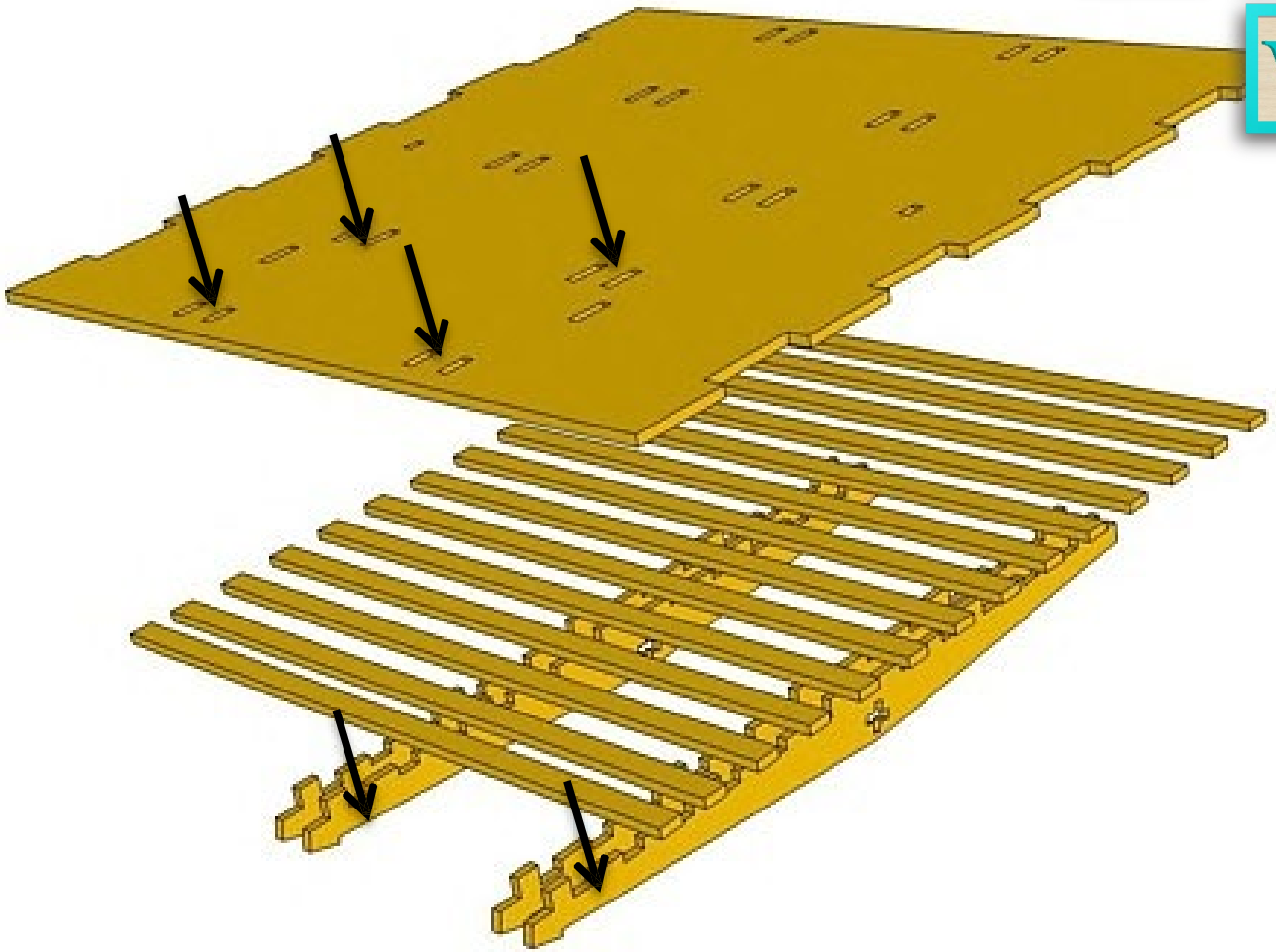

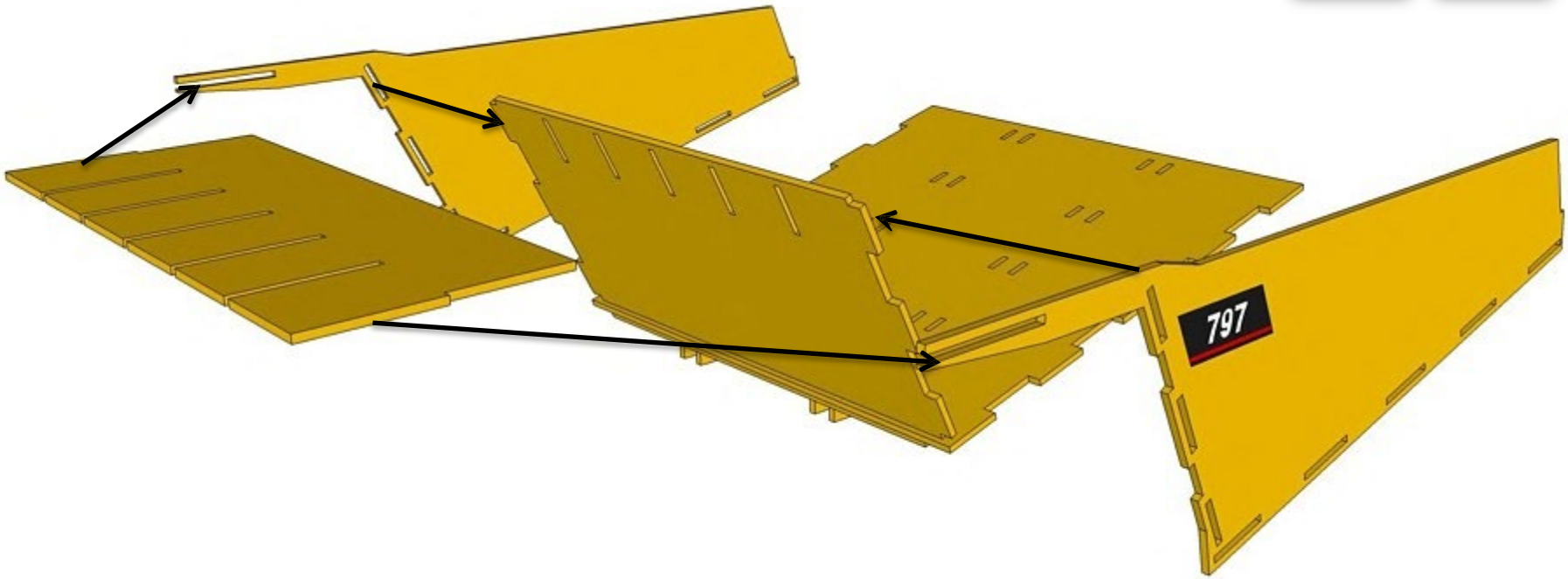
797

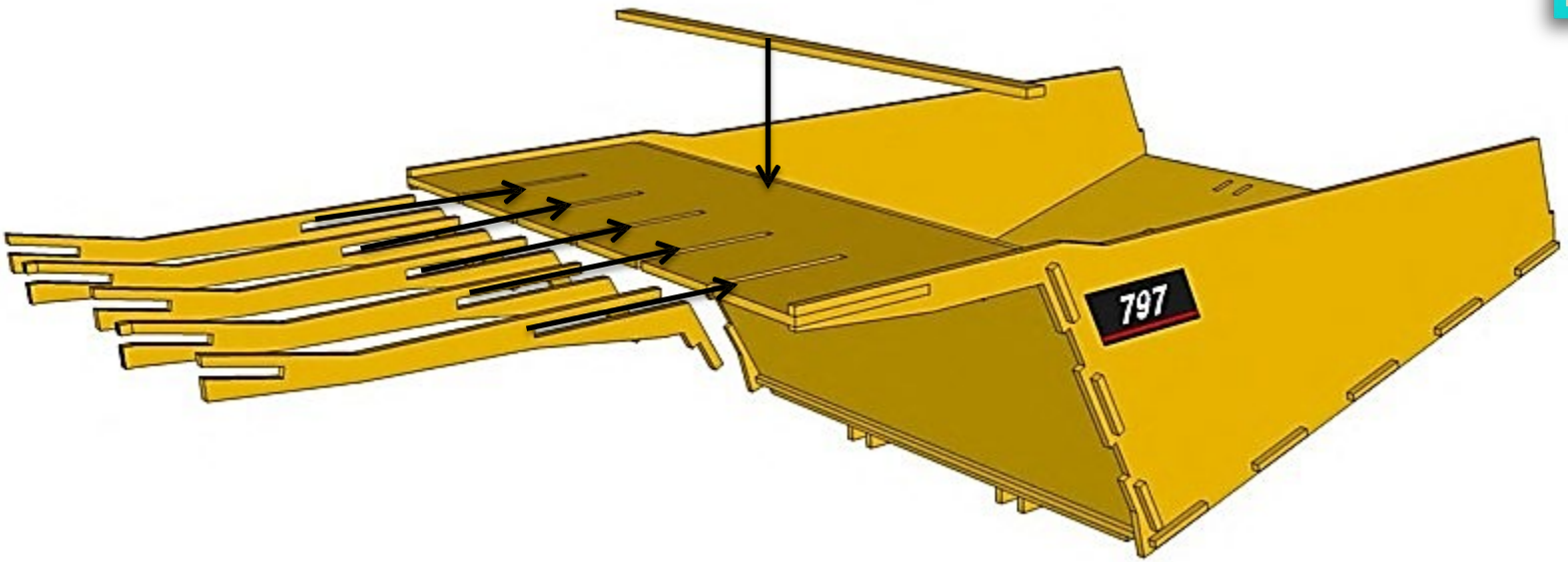
797

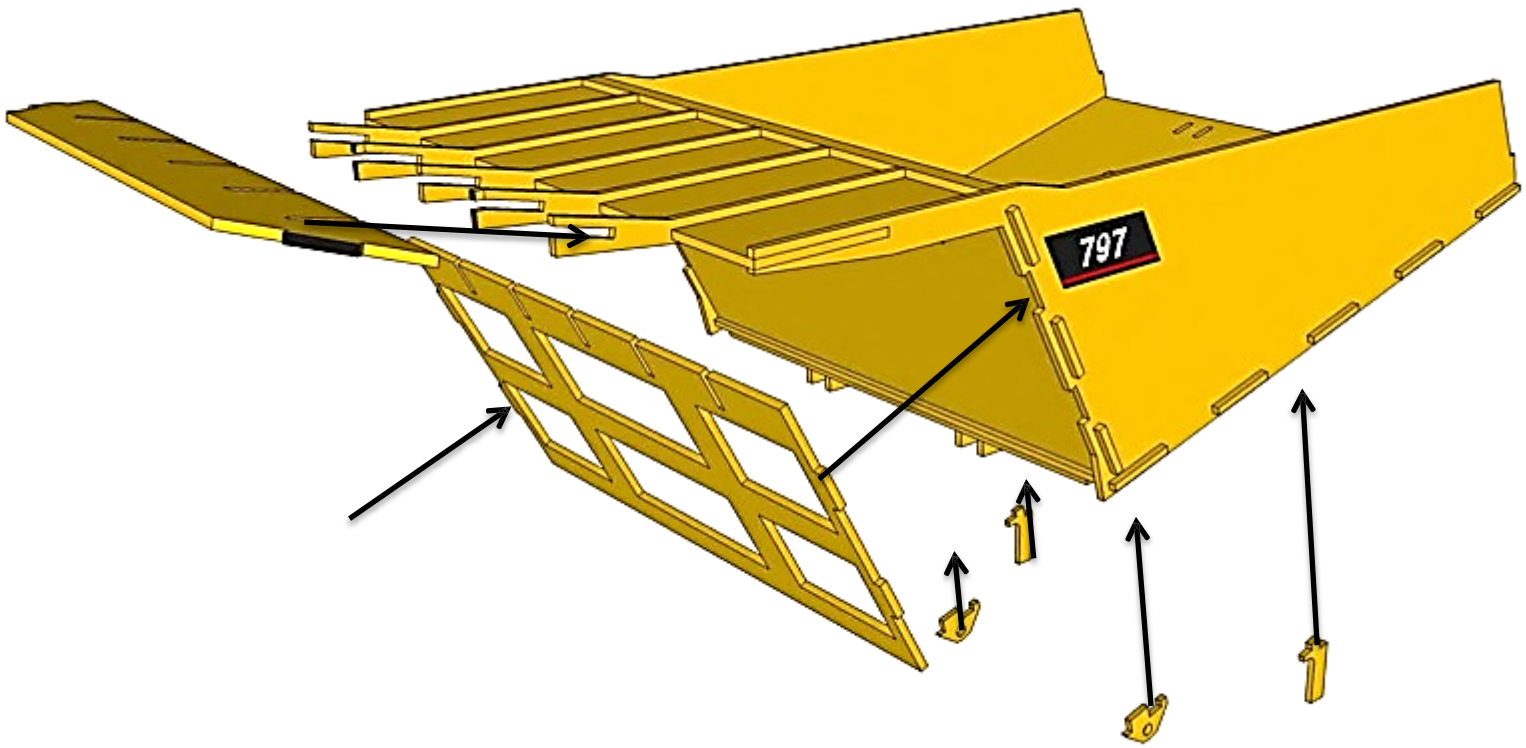
797

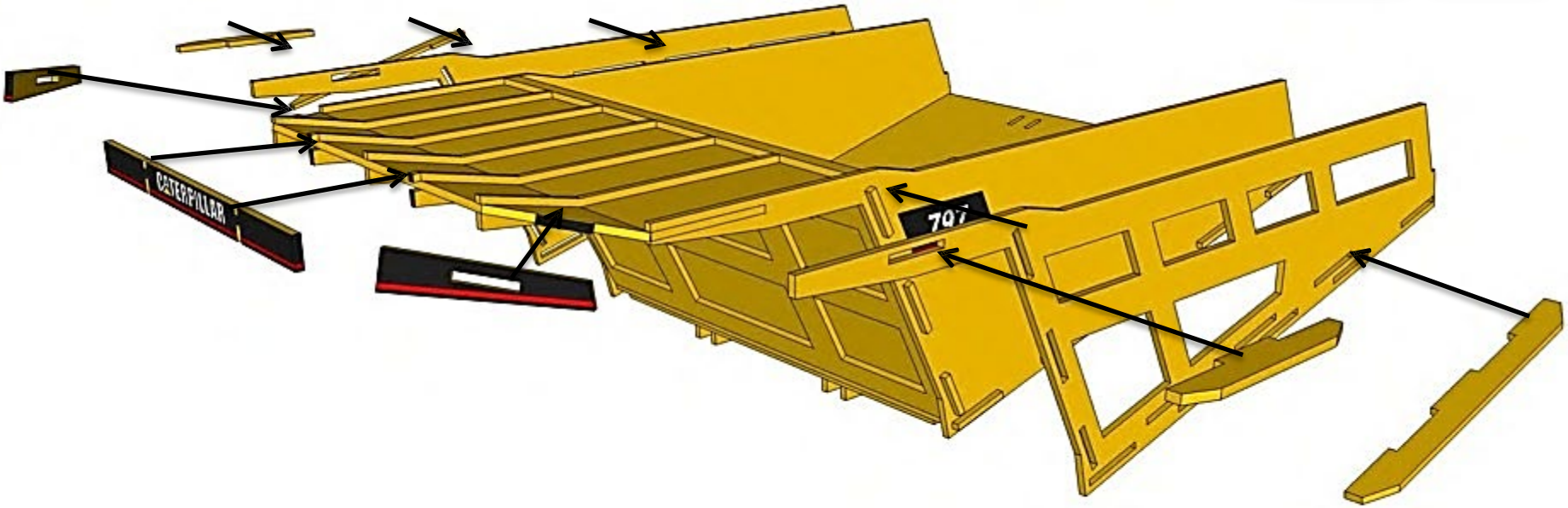
CATERPILLAR
797

CATERPILLAR
797

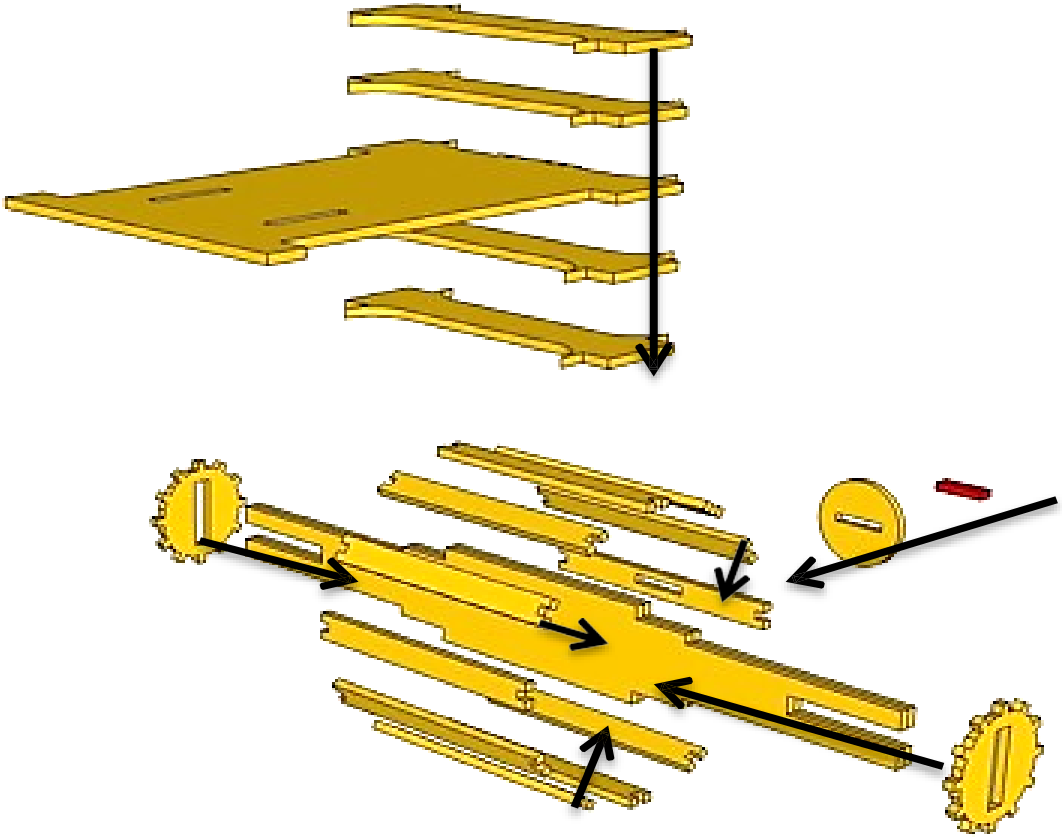

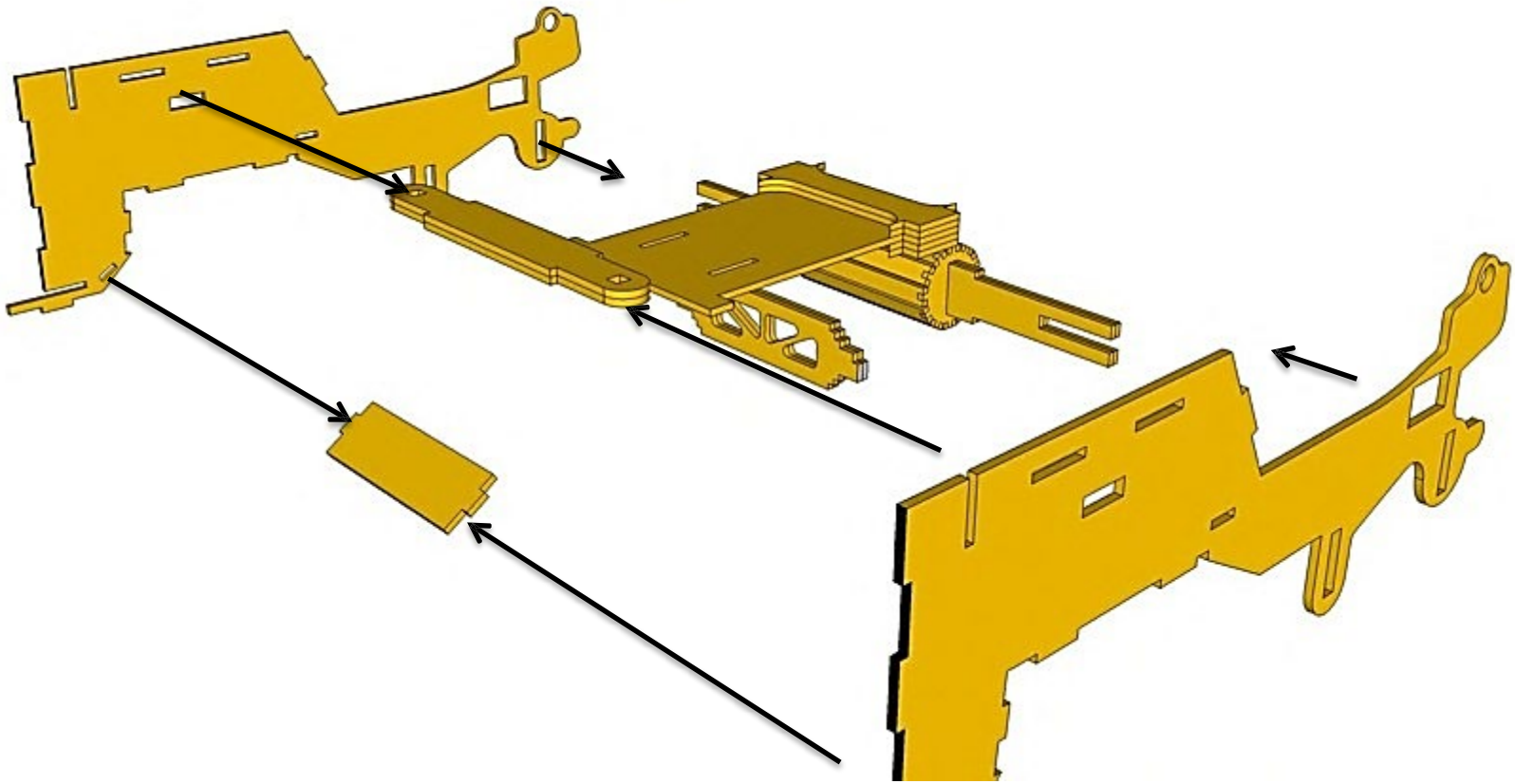

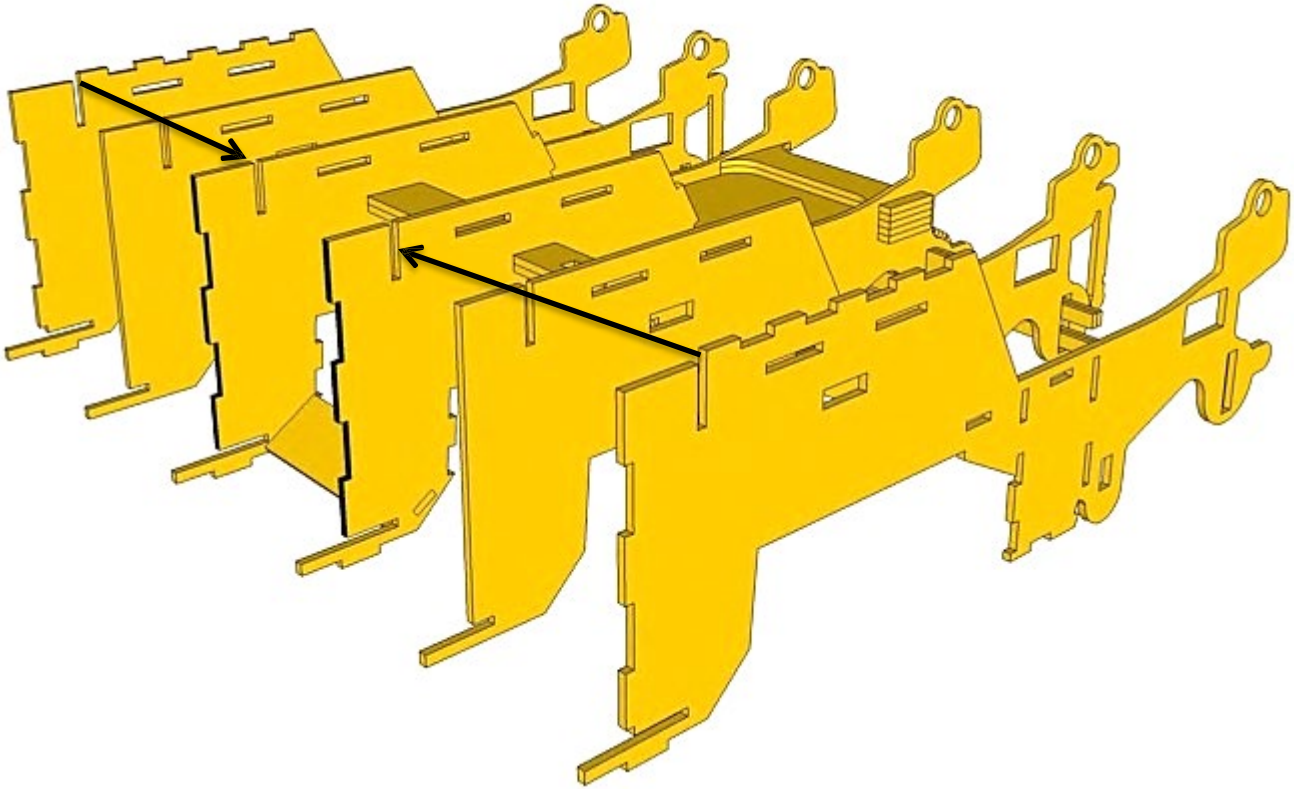

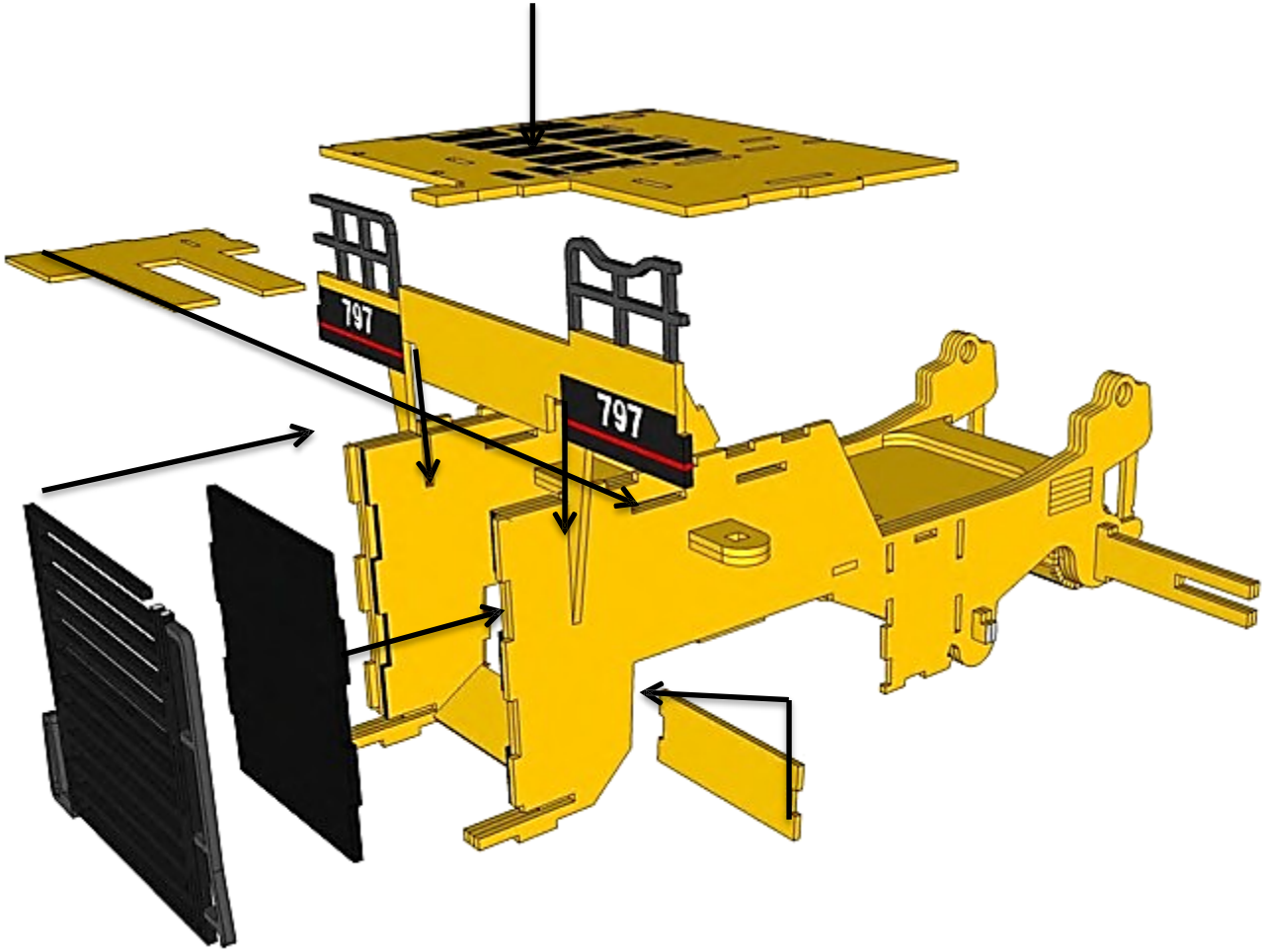
797
797

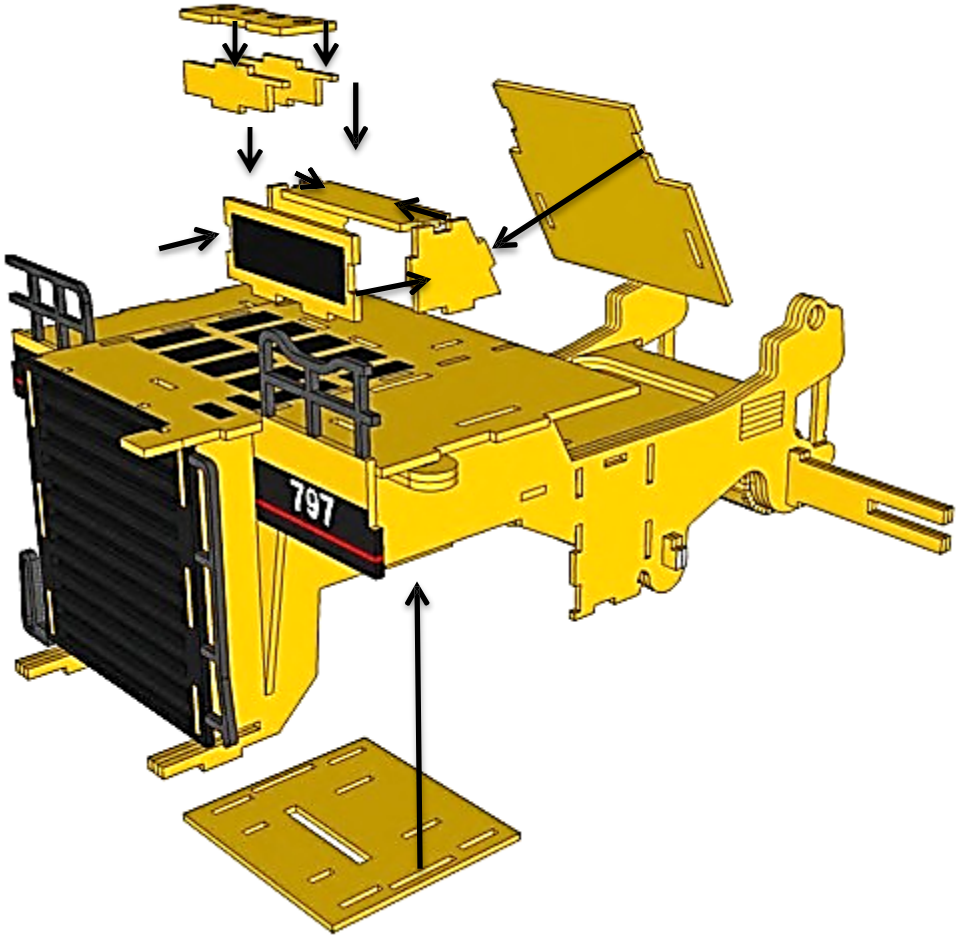
797

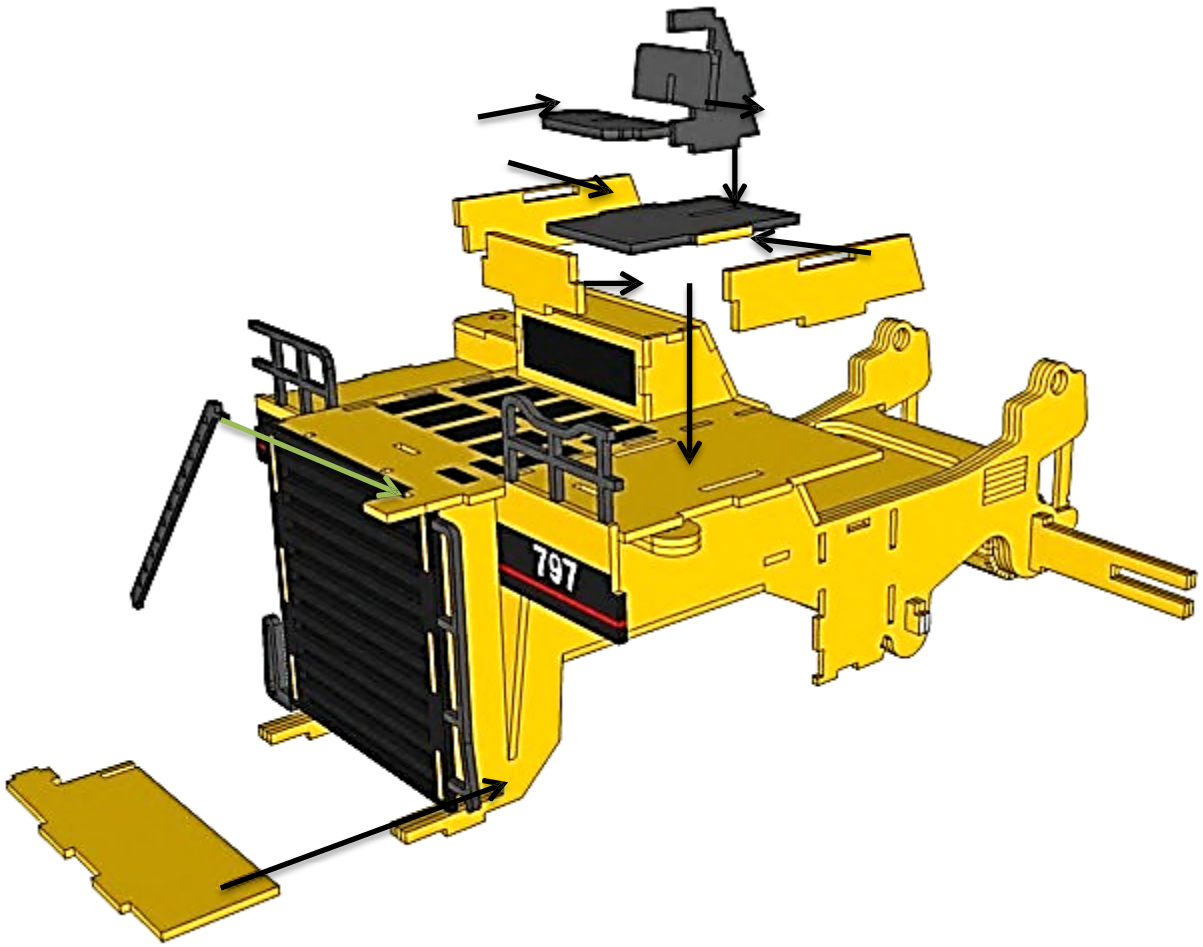
797

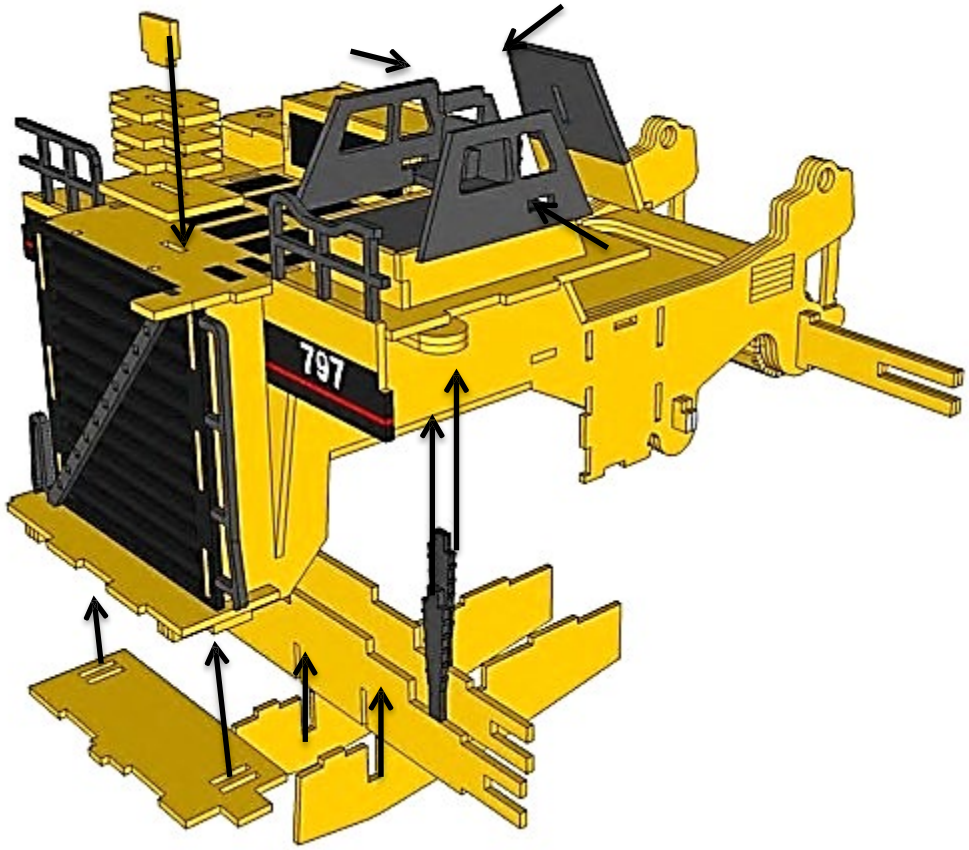
797

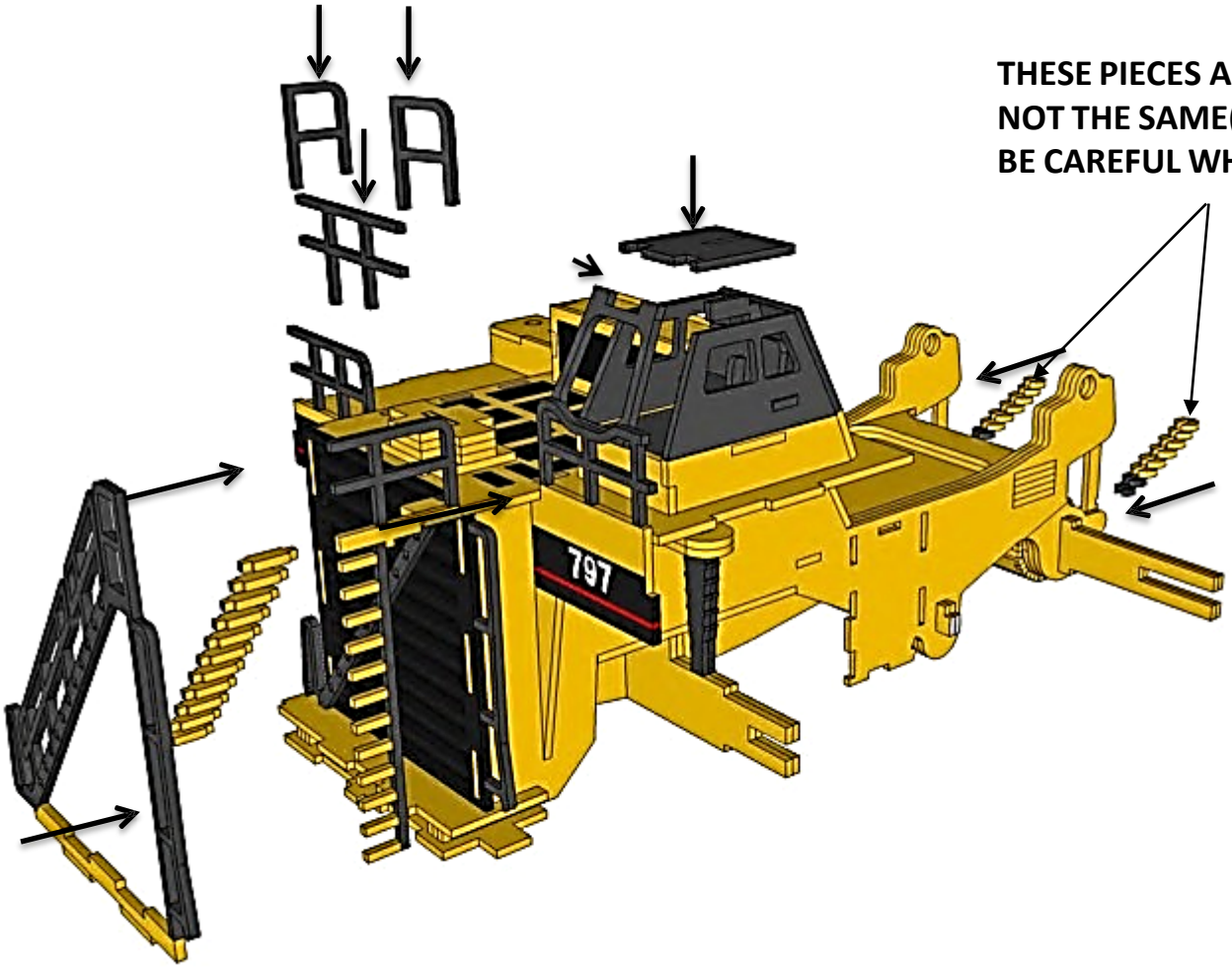

THESE PIECES ARE
NOT THE SAME(SMALL DIFFERENCE)
BE CAREFUL WHEN ASSEMBLING

797
CAT

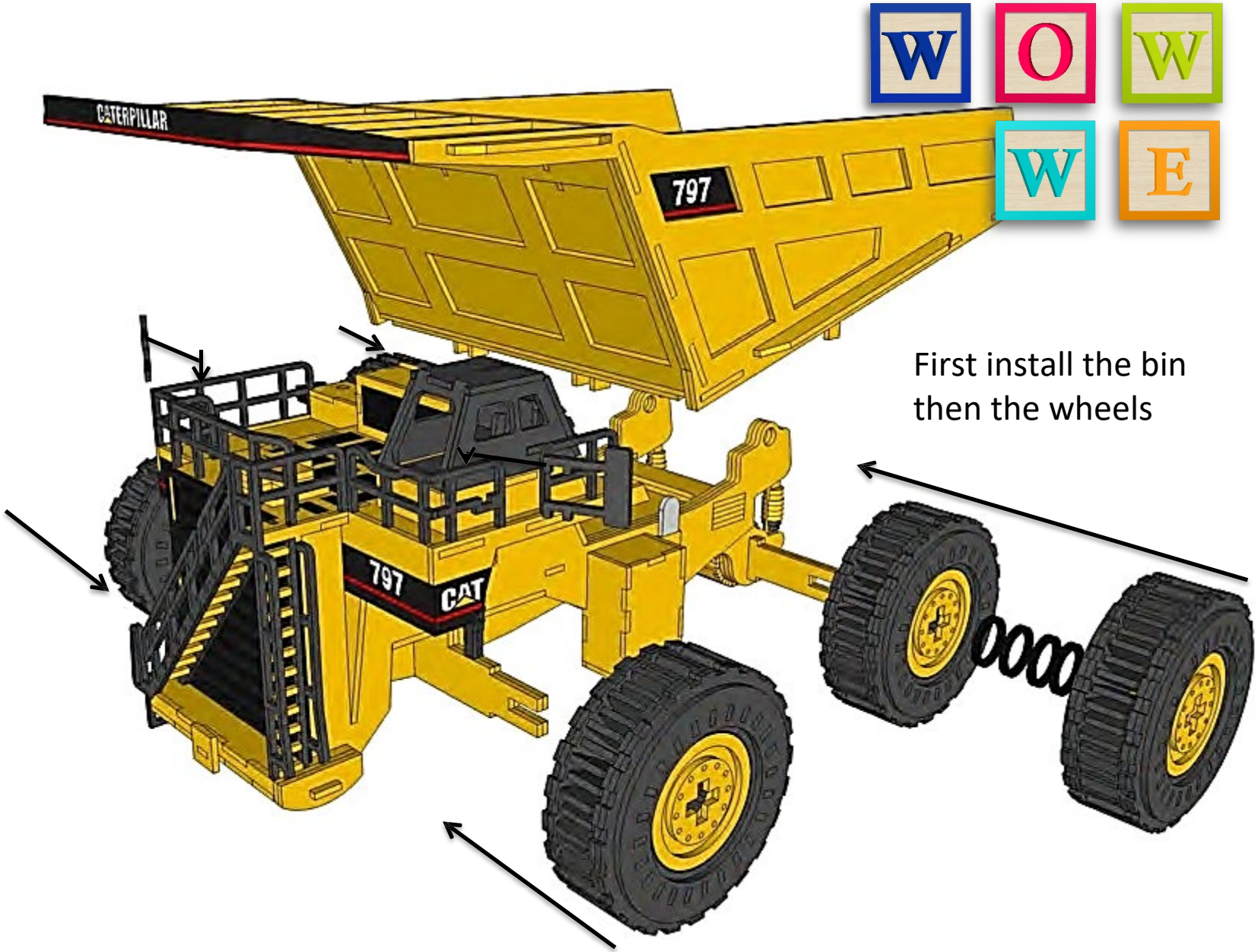
CATERPILLAR
797
797
CAT
First install the bin
then the wheels

CATERPILLAR
797
797
CAT
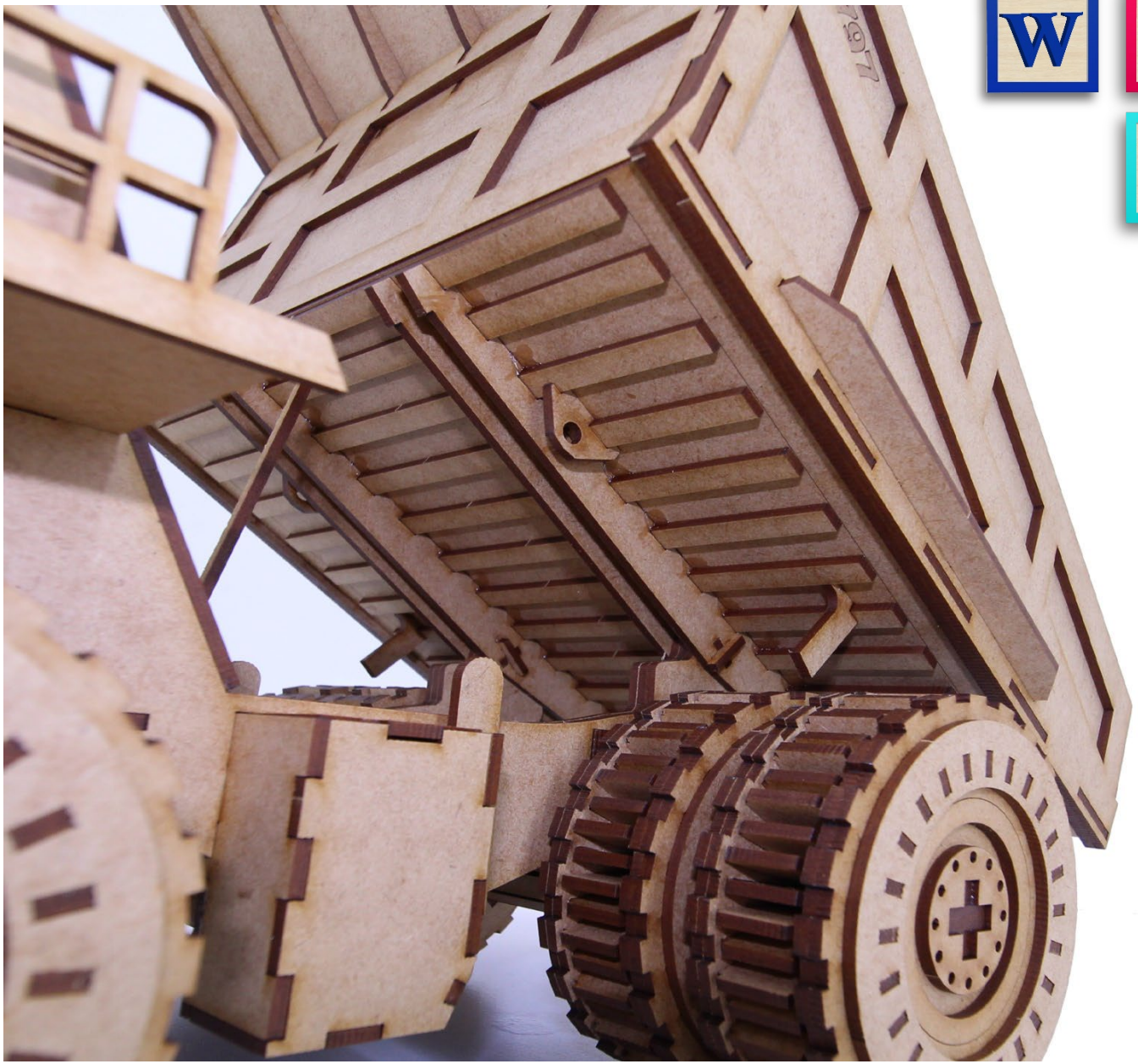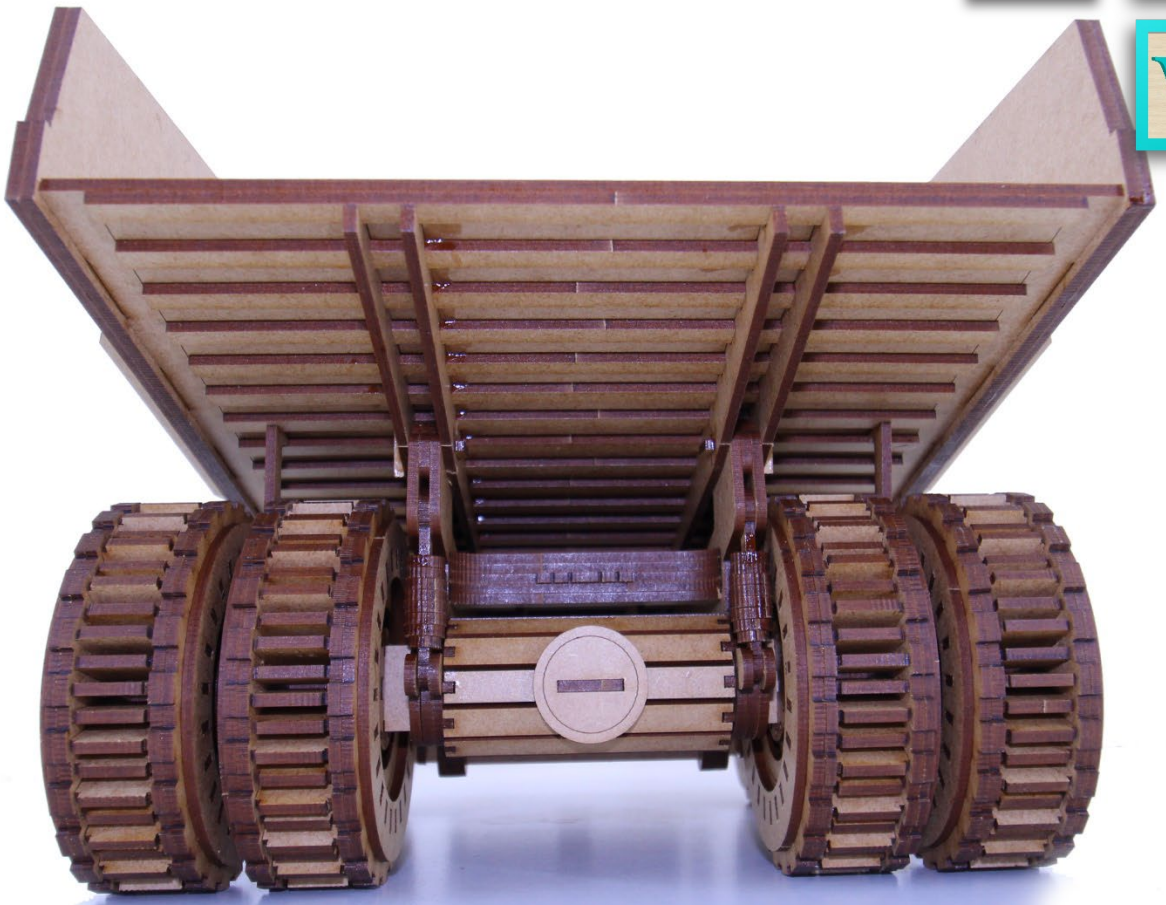
797
CAT