3D WOODEN MODEL

Toddler Toys Collection

Plane

Assembly Guide | SKU: TT_18

www.wowwe.co.za

BEFORE YOU START

Read this page first. It only takes a minute.

Go gently: this is wood, not plastic.

Your kit is laser-cut from wood board. It is strong once put together, but thin parts can snap if you force them.

No glue needed. The pieces slot into each other. Line the slots up and push gently; if a joint is tight, sand it lightly. Never hammer or twist a piece in.

Want it to stay together? Add a small dab of ordinary wood glue (white PVA glue) in each slot.

Clean the edges. Wipe off laser burn marks with a slightly damp cloth or an alcohol wipe.

Grown-ups build, little ones play. An adult should put this model together. Small pieces can be a choking hazard, so keep them away from very young children.

Make it yours. Paint it with child-safe paint and seal it with a clear wood sealer so it lasts.

You will need: your hands • fine sandpaper • a damp cloth • wood glue and paint (optional)

WHAT'S IN THE BOX

Check that you have all 7 pieces before you start.

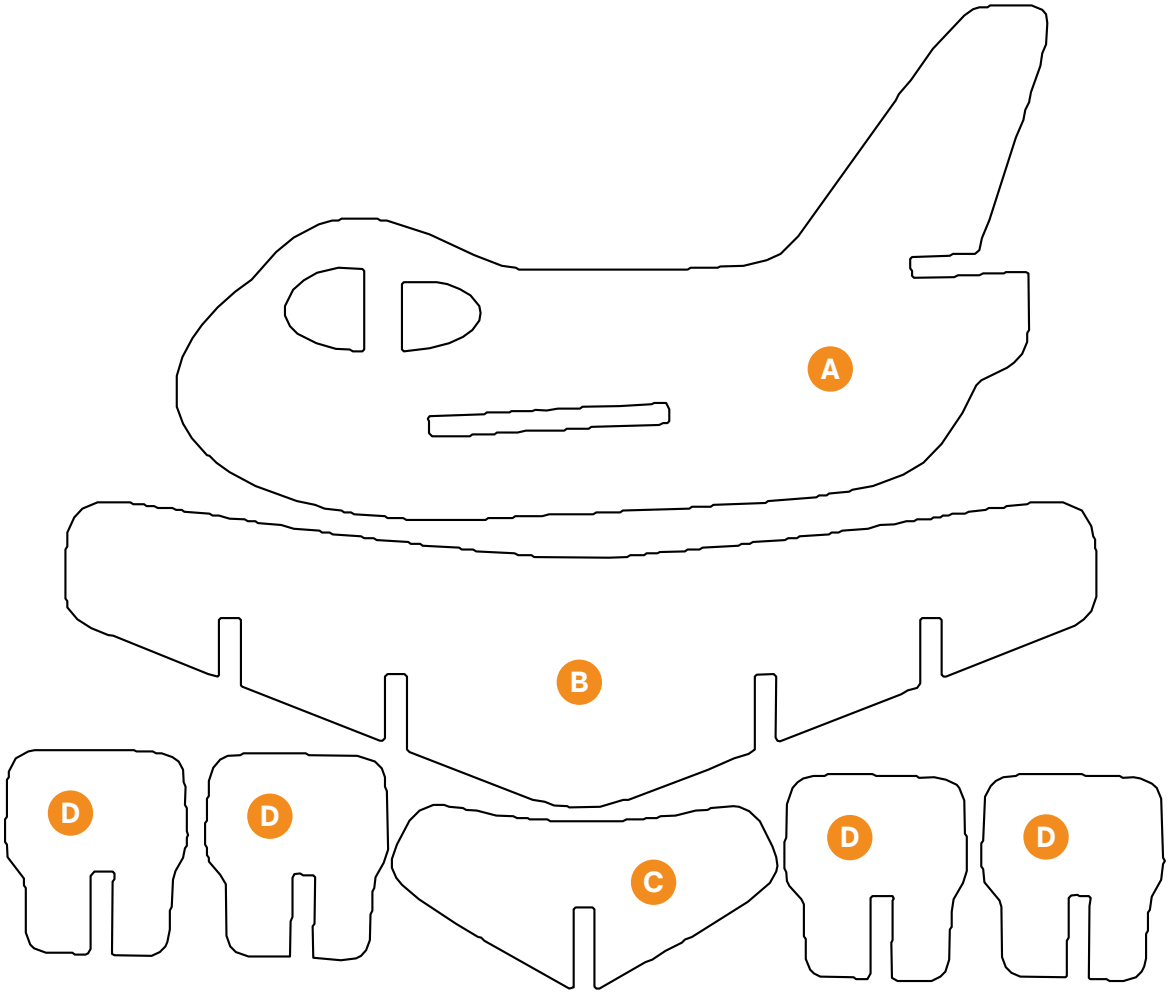

- **A** Piece A × 1
- **B** Piece B × 1
- **C** Piece C × 1
- **D** Piece D × 4

Each letter in the drawing shows which piece is which.

STEP 1

Put it together

1. **Sort the pieces**
   Lay all the pieces out and match them to the letters on the parts page.

2. **Follow the arrows**
   Each arrow shows where a piece slides in. Line up the slots and push the pieces together so the slots lock into each other.

3. **Check it stands**
   Push every joint all the way in, then stand the model on a flat table. If it wobbles, press the pieces in a little further.

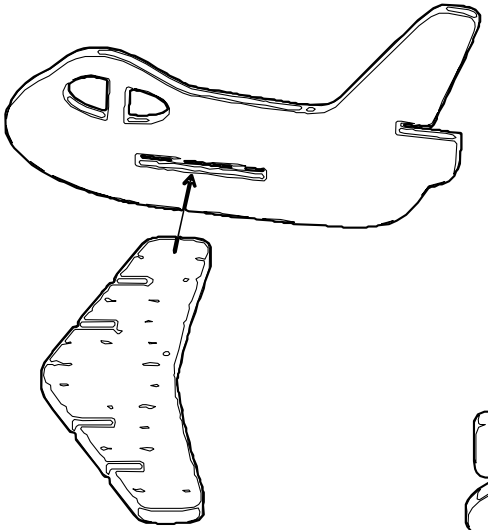

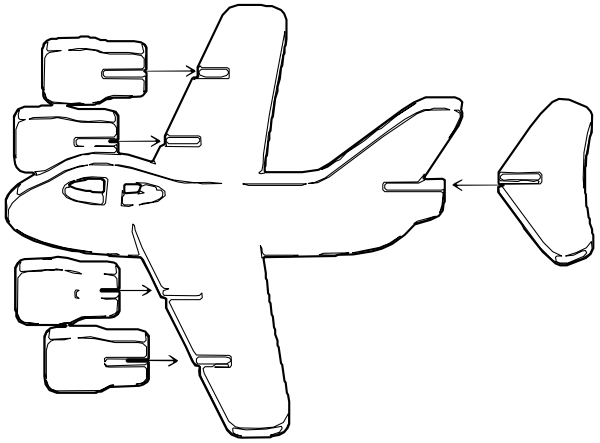

ALL DONE!

Your Plane is ready to play.

Need help or missing a piece? Visit **www.wowwe.co.za** and get in touch. We love seeing your finished models, so share a photo with us!

Wow We 3D Wooden Models | Toddler Toys | Plane | SKU TT_18